MILI bollard
for setting in concrete



per item
CHF 139.-

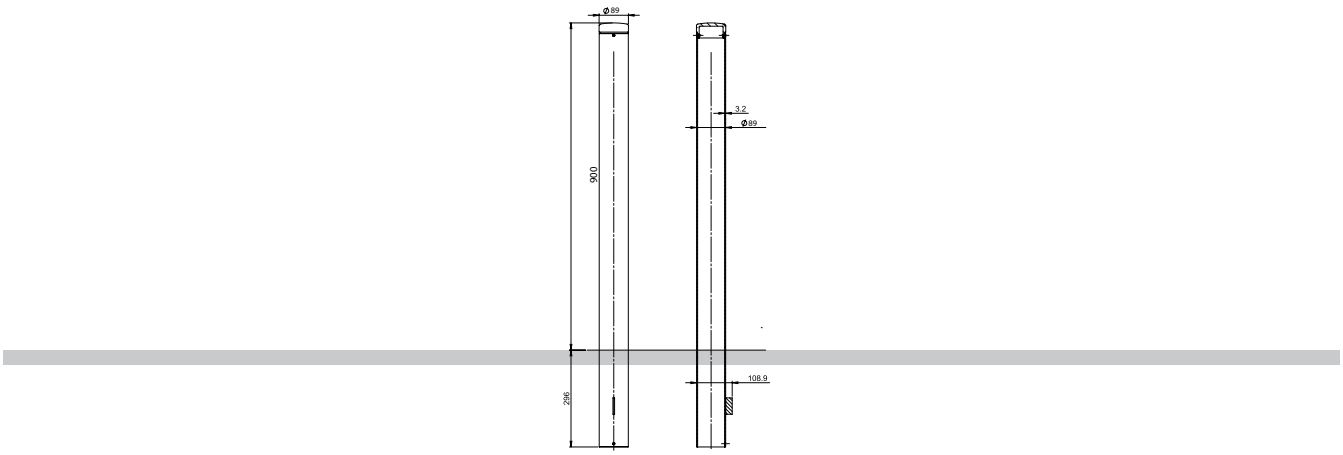

MILI bollard
- Tubular steel: Ø 89 mm
- Height 1000 mm
- Weight: 8 kg

Materials:
- Galvanised tubular steel
- Aluminium cover

Installation:
- For setting in concrete

BURRI public elements AG
www.burri.world

CH-8152 Glattbrugg
T +41 44 874 44 22

office-ch@burri.world

BURRI blu
Die Einsteigerlinie von BURRI

BURRI public elements
Deutschland GmbH

D-41066 Mönchengladbach
T +49 (0) 2161 400 72 40

office-de@burri.world